Bluetone Liverpool

Preamp schematics

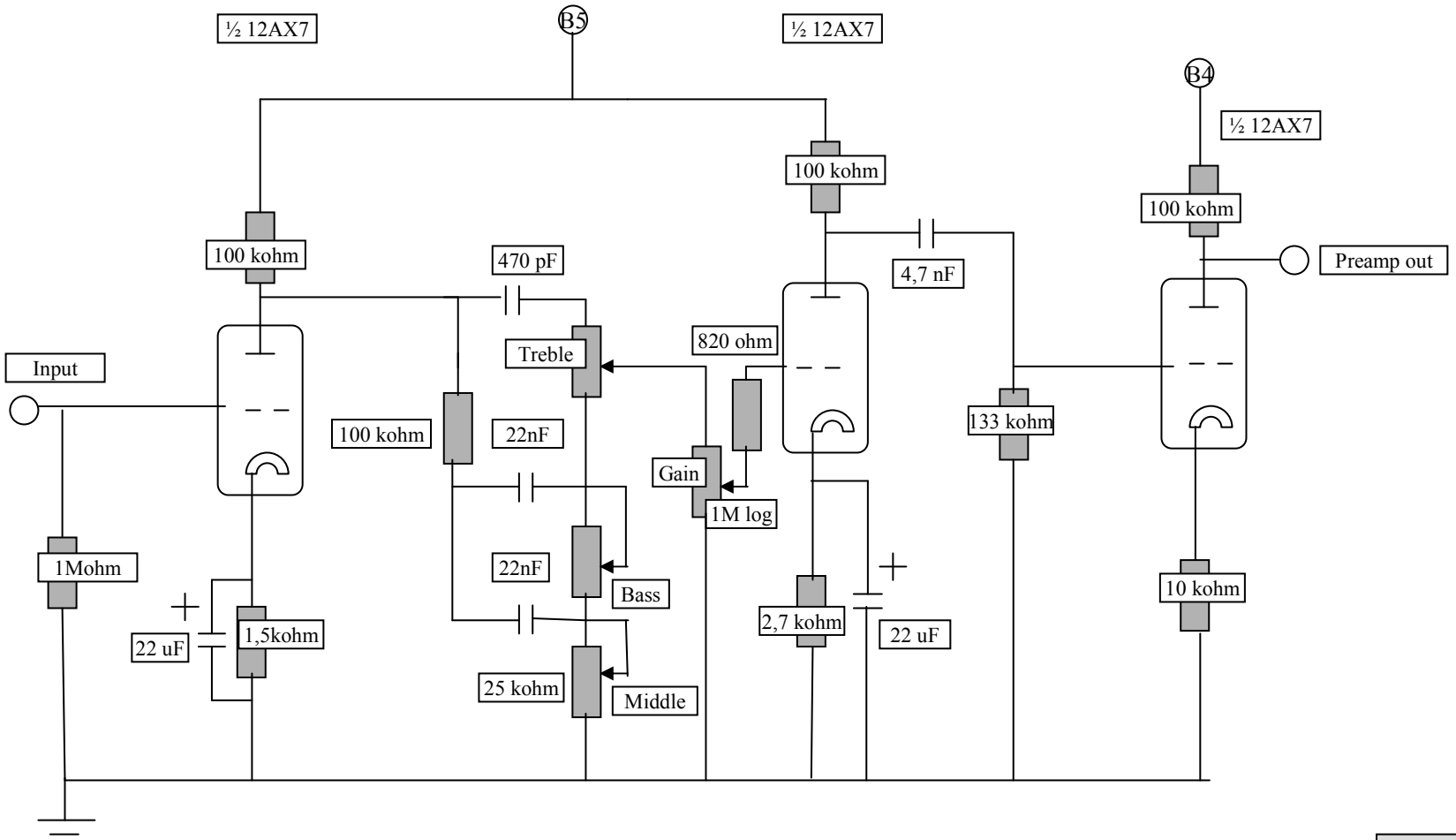

Harry Kneckt
13.9.2007

Bluetone Liverpool

Power amp and power supply schematics

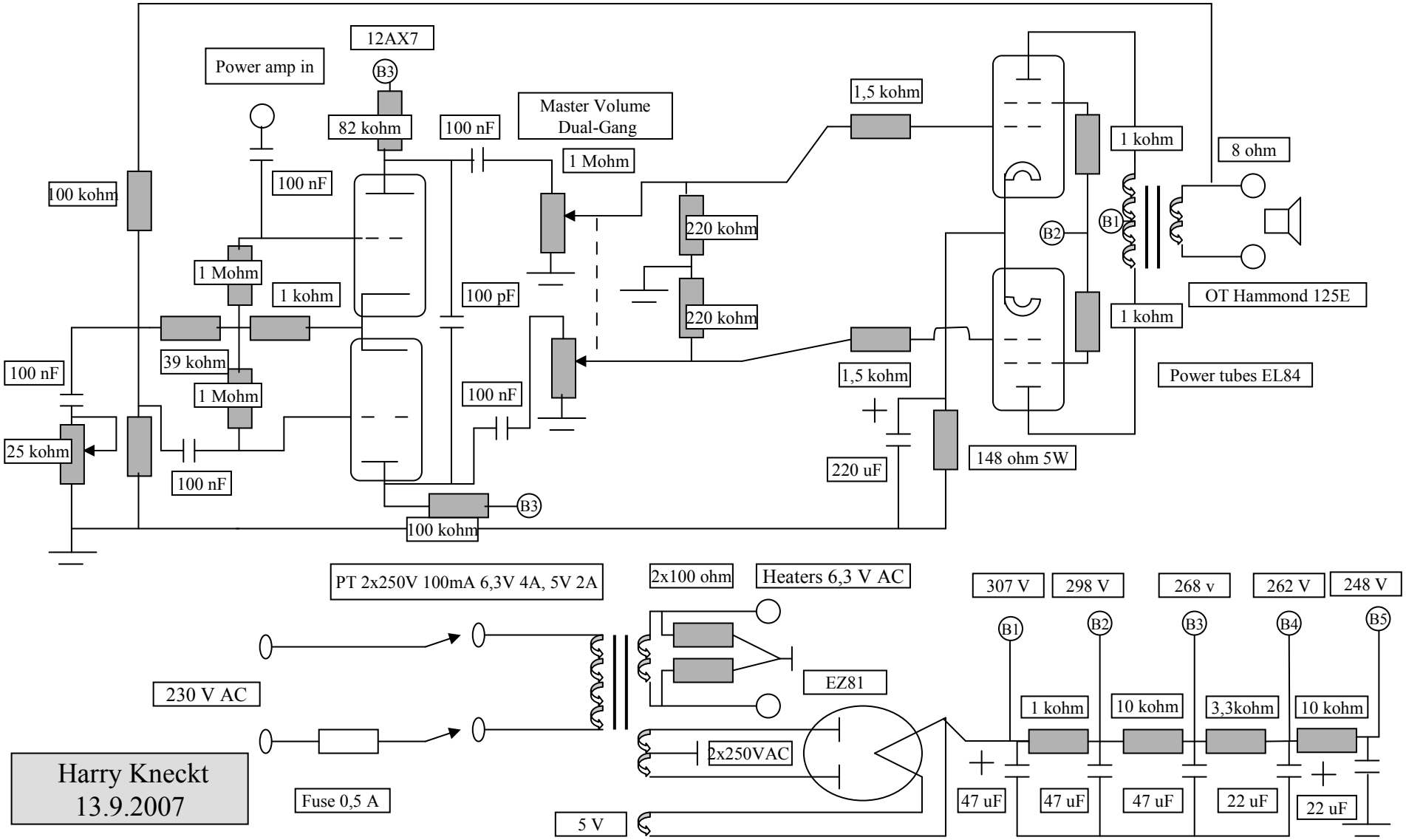

Bluetone Liverpool
Voltage chart

V1(12AX7)
1= 161 V
3= 1,28V
6= 187 V
8= 1,58 V

V2(12AX7)
1= 233 V
3= 2,46 V

V3(12AX7)
1= 208 V
3= 60,5 V
6= 198 V
8= 60,5 V

V4(EL84)
3= 10,3 V
7= 306 V
9= 295 V

V5(EL84)
3= 10,3 V
4= 306 V
8= 295 V

Harry Kneckt
13.9.2007